Specification for Approval

Customer:_____

Model Name:_____

Supplier Approval			Customer approval
R&D Designed	R&D Approved	QC Approved	
Peter	Peng Jun		

Revision Record

REV NO.	REV DATE	CONTENTS	Note
A	2013-01-12	NEW ISSUE	
B	2014-11-23	Modify backlight	

Table of Contents

1. Scope

This specification defines general provisions as well as inspection standards for TFT module supplied by AMSON electronics.
If the event of unforeseen problem or unspecified items may occur, naturally shall negotiate and agree to solution.

2. General Information

ITEM	STANDARD VALUES	UNITS
LCD type	5.0”TFT	--
Dot arrangement	480(RGB)×272	dots
Color filter array	RGB vertical stripe	--
Display mode	TN / Transmission / Normally White	--
Viewing Direction	6 o’clock(Gray scale inversion)	--
Driver IC	ILI6480	--
Module size	120.7(W)×75.2(H)×3.1(T)	mm
Active area	110.88(W)×62.832(H)	mm
Dot pitch	0.231(W)×0.231(H)	mm
Interface	24-bit Parallel RGB Interface	--
Operating temperature	-20 ~ +70	°C
Storage temperature	-30 ~ +80	°C
Back Light	12 White LED	--
Weight	TBD	g

3. External Dimensions

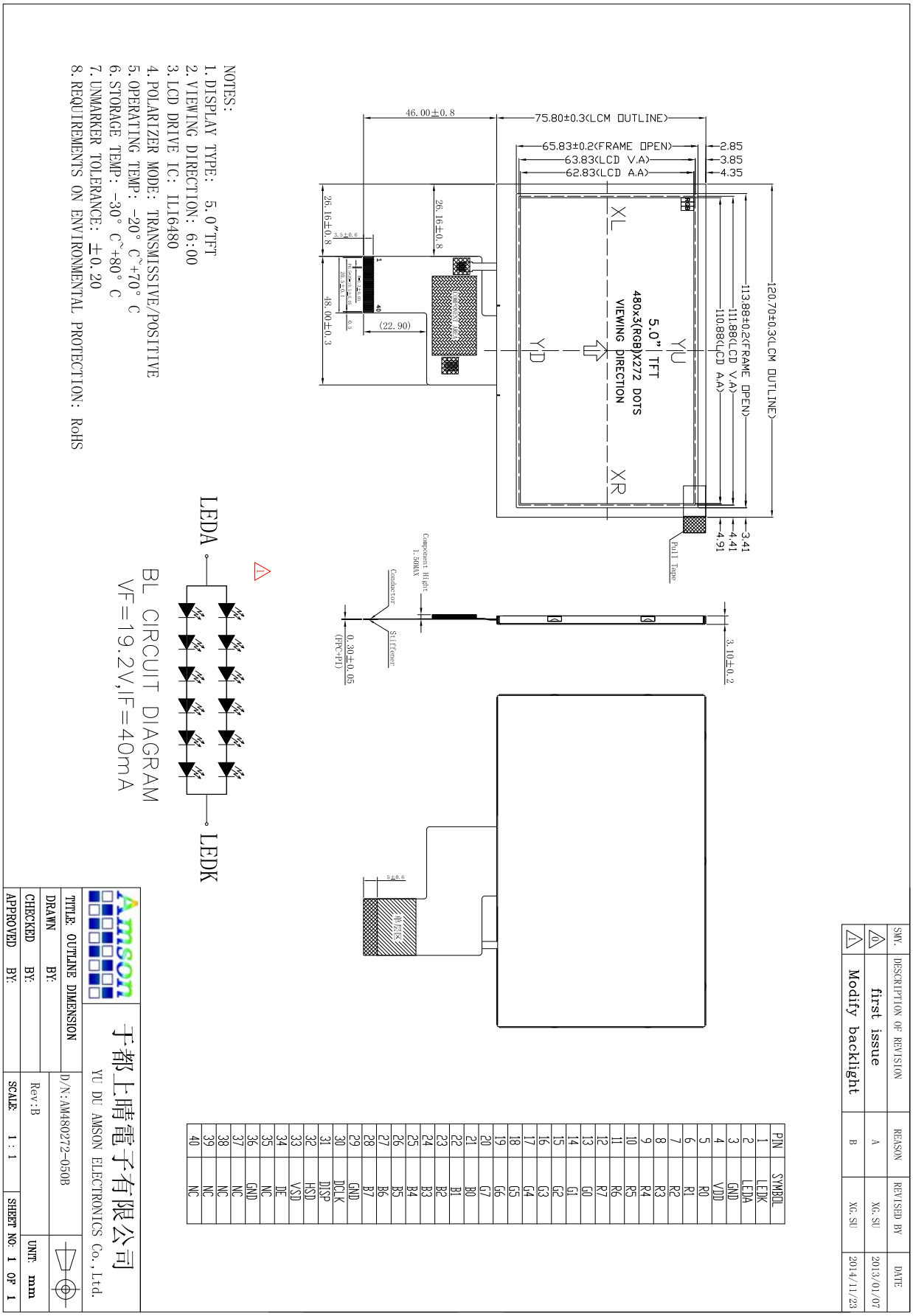

4. Interface Description

Pin	Symbol	Description.
1	LEDK	LED backlight (Cathode).
2	LEDA	LED backlight (Anode).
3	GND	Ground.
4	VDD	Power supply.
5~12	R0~R7	Red Data.
13~20	G0~G7	Green Data.
21~28	B0~B7	Blue Data.
29	GND	Ground.
30	DCLK	Clock.
31	DISP	Display on/off.
32	HSD	Horizontal sync input in RGB mode.
33	VSD	Vertical sync input in RGB mode.
34	DE	Data input Enable.
35	NC	No connection.
36	GND	Ground.
37	NC	No connection.
38	NC	No connection.
39	NC	No connection.
40	NC	No connection.

5. Absolute Maximum Ratings

Item	Symbol	Min.	Max.	Unit
Logic Supply Voltage	VDD	-0.3	5.0	V
Input Voltage	VIN	-0.3	VDD+0.3	V
Operating Temperature	TOP	-20	70	°C
Storage Temperature	TST	-30	80	°C
Storage Humidity	HD	20	90	%RH

6. DC Characteristics

Item	Symbol	Min.	Typ.	Max.	Unit	Remark
Power Supply Voltage	VDD	3.0	3.3	3.6	V	-
Input High Voltage	V_{IH}	0.7VDD	--	VDD	V	Digital input pins
Input Low Voltage	V_{IL}	GND	--	0.3VDD	V	Digital input pins
Output High Voltage	V_{OH}	VDD-0.4	--	VDD	V	Digital output pins
Output Low Voltage	V_{OL}	GND	--	GND+0.4	V	Digital output pins
I/O Leak Current	I_{LI}	--	--	±1.0	uA	-

7. Timing Characteristics

7.1 Power ON/OFF Sequence

Power On Sequence

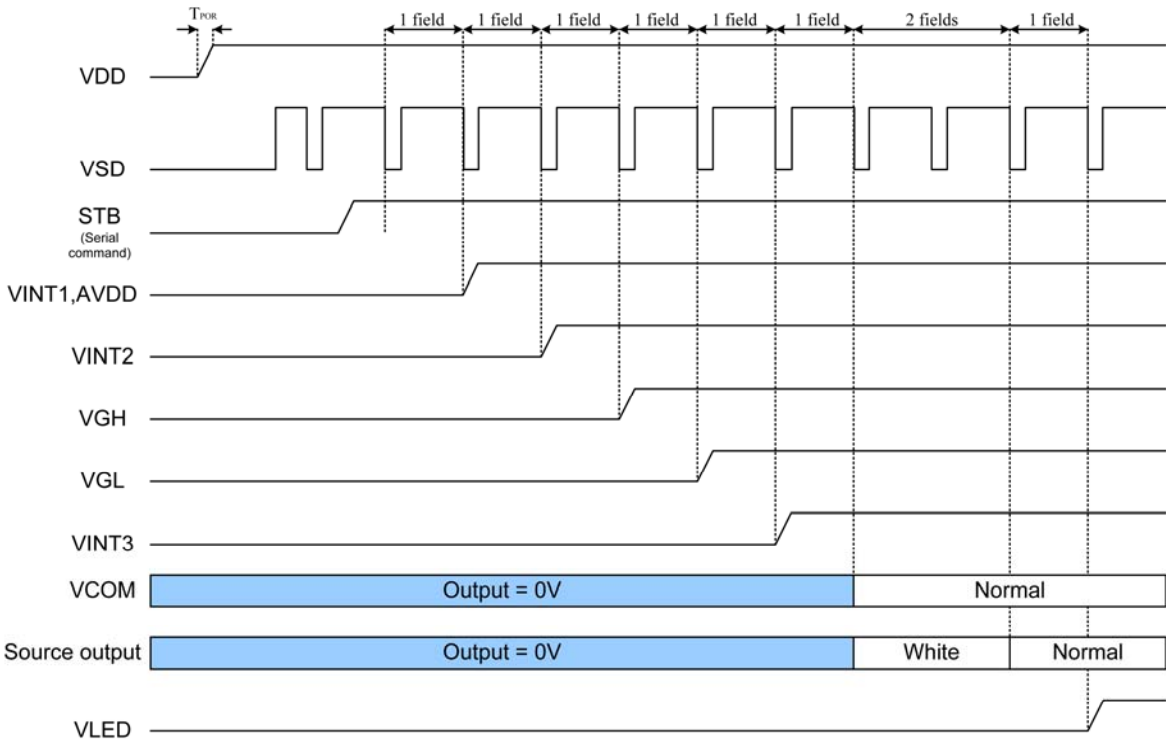

Power Off Sequence

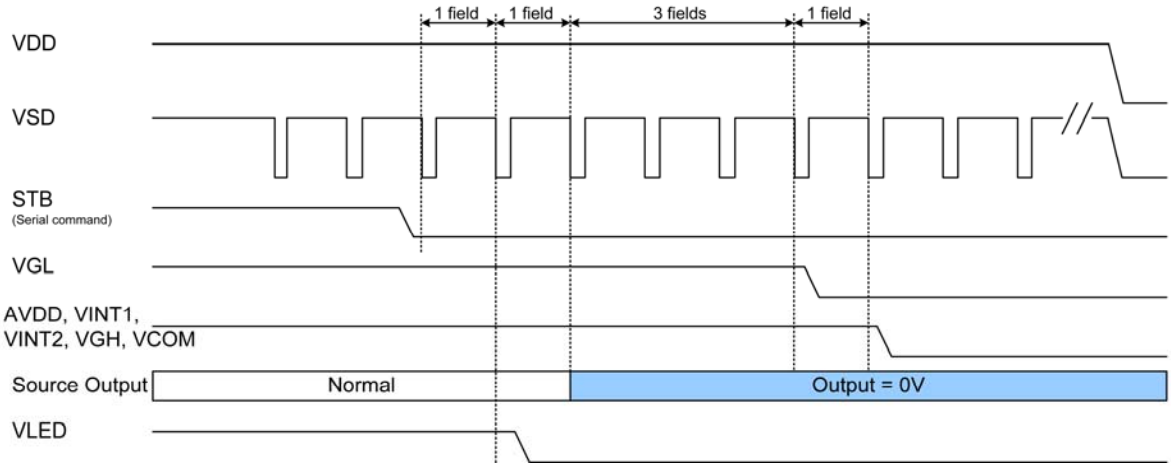

7.2 Data Input Format

Vertical input timing

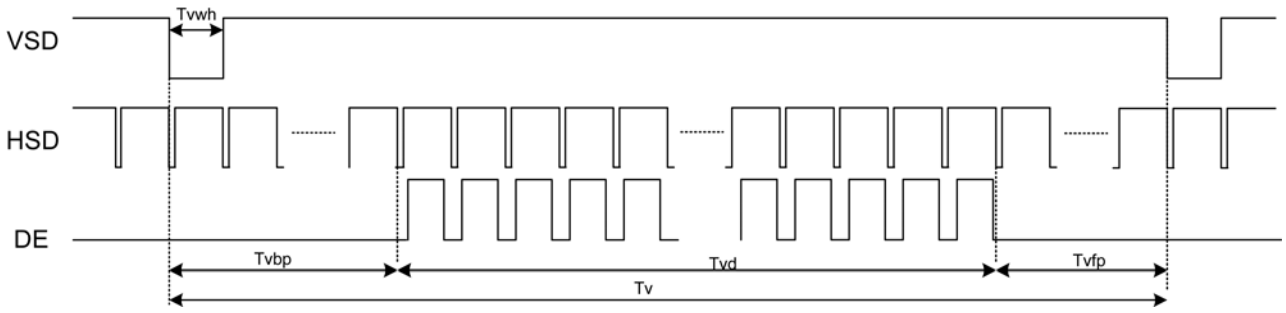

Parallel RGB Mode Data Format

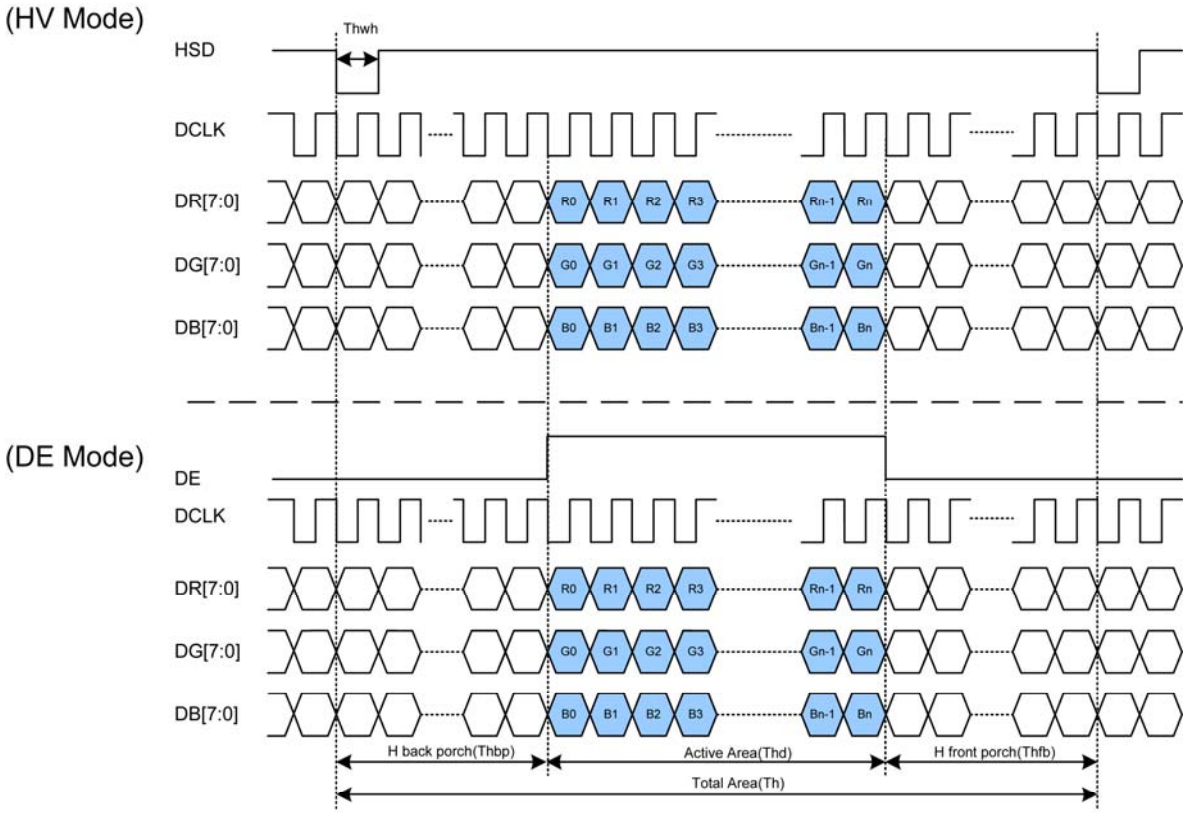

Parallel RGB input timign table

Parameter	Symbol	Value			Unit
		Min.	Typ.	Max.	
DCLK frequency	fclk	5	9	12	MHz
VSD period time	Tv	277	288	400	H
VSD display area	Tvd		272		H
VSD back porch	Tvb	3	8	31	H
VSD front porch	Tvfp	2	8	93	H
HSD period time	Th	520	525	800	DCLK
HSD display area	Thd		480		DCLK
HSD back porch	Thbp	36	40	255	DCLK
HSD front porch	Thfp	4	5	65	DCLK

8. Backlight Characteristics

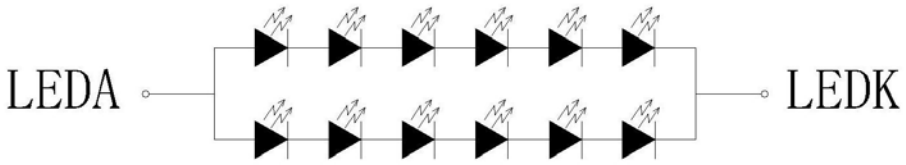

BL CIRCUIT DIAGRAM
VF=19.2V,IF=40mA

Item	Symbol	MIN	TYP	MAX	UNIT	Test Condition
Supply Voltage	Vf	17.4	19.2	21.0	V	If=40mA
Supply Current	If	--	40	50	mA	--
Luminous Intensity for LCM (With TP)	--	300	350	--	Cd/m^2	If=40mA
Uniformity for LCM	--	80	--	--	%	If=40mA
Life Time	--	50000	--	--	Hr	If=40mA
Backlight Color	White					

9. Optical Characteristics

ITEM		SYMBOL	CONDITION	MIN.	TYP.	MAX.	UNIT	REMARK
Brightness		BL	θ =φ= 0°	300	350	--	cd/m²	Note2
Contrast Ratio		CR	θ =φ= 0°	350	500	--	--	Note3
Response Time		Tr+ Tf	θ =φ= 0°	--	30	--	ms	Note4
Viewing Angle	Upper	θ	CR≧10	45	55	--	--	Note 5
	Down			55	65	--	--	
	Right	φ		55	65	--	--	
	Left			55	65	--	--	
Color Filter Chromaticity	White	X	θ =φ= 0°	0.275	0.305	0.335	--	Note 6
		y		0.304	0.334	0.364	--	
	Red	X	θ =φ= 0°	0.578	0.608	0.638	--	
		y		0.286	0.316	0.346	--	
	Green	X	θ =φ= 0°	0.275	0.305	0.335	--	
		y		0.526	0.556	0.586	--	
	Blue	X	θ =φ= 0°	0.105	0.135	0.165	--	
		y		0.107	0.137	0.167	--	

Note 1.Ambient condition：25°C±2°C，60±10%RH，under 10 Lux in the darkroom。

Note 2.Measure device：BM-5A (TOPCON)，viewing cone=1°，IL=40mA。

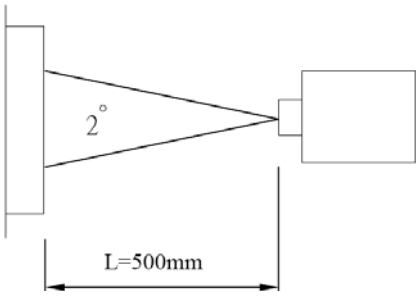

Note 3. Definition of Contrast Ratio：

CR = White Luminance (ON) / Black Luminance (OFF)

Note 4. Definition of response time：The response time is defined as the time interval between the 10% and 90% amplitudes.

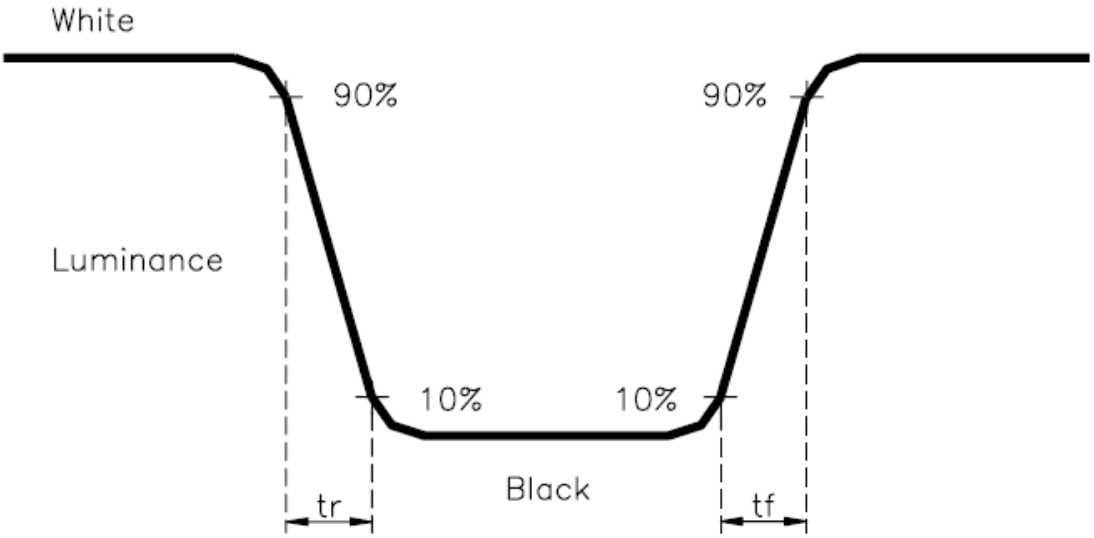

Note 5. Definition of view angle(θ，ψ)：

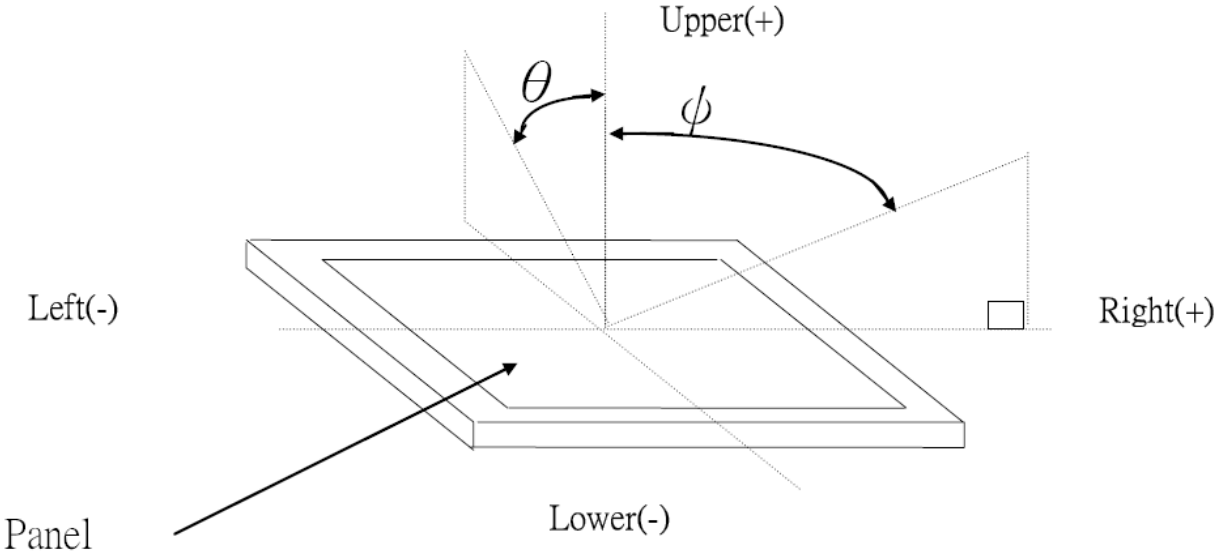

Note 6. Definition of color chromaticity (CIE1931)

Color coordinates measured at the center point of LCD.

10. Reliability Test Conditions and Methods

NO.	TEST ITEMS	TEST CONDITION	INSPECTION AFTER TEST
□	High Temperature Storage	80°C±2°C×200Hours	Inspection after 2~4hours storage at room temperature, the samples should be free from defects: 1, Air bubble in the LCD. 2, Seal leak. 3, Non-display. 4, Missing segments. 5, Glass crack. 6, Current IDD is twice higher than initial value. 7, The surface shall be free from damage. 8, The electric characteristic requirements shall be satisfied.
□	Low Temperature Storage	-30°C±2°C×200Hours	
□	High Temperature Operating	70°C±2°C×120Hours	
□	Low Temperature Operating	-20°C±2°C×120Hours	
□	Temperature Cycle(Storage)	-20°C (30min) ⟺ 25°C (5min) ⟺ 70°C (30min) 1cycle Total 10cycle	
□	Damp Proof Test (Storage)	50°C±5°C×90%RH×120Hours	
□	Vibration Test	Frequency:10Hz~55Hz~10Hz Amplitude:1.5M X,Y,Z direction for total 3hours (Packing Condition)	
□	Drooping Test	Drop to the ground from 1M height one time every side of carton. (Packing Condition)	
□	ESD Test	Voltage:±8KV,R:330Ω,C:150PF,Air Mode,10times	

REMARK:
1, The Test samples should be applied to only one test item.
2, Sample side for each test item is 5~10pcs.
3,For Damp Proof Test, Pure water(Resistance＞10MΩ)should be used.
4,In case of malfunction defect caused by ESD damage, if it would be recovered to normal state after resetting, it would be judge as a good part.
5, EL evaluation should be accepted from reliability test with humidity and temperature: Some defects such as black spot/blemish can happen by natural chemical reaction with humidity and Fluorescence EL has.
6, Failure Judgment Criterion: Basic Specification Electrical Characteristic, Mechanical Characteristic, Optical Characteristic.

11. Inspection Standard

This standard apply to C-STN/TFT module

1. **Spot check plan:**

According to spot check level Ⅱ,MIL-STD-105D Level Ⅱ,the rank of accept or reject is below:

3A、2A：major non-conformance：AQL 0.25 minor non-conformance：AQL 0.4

1A：major non-conformance： AQL 0.65 minor non-conformance： AQL 1.

2. **Inspection condition:**

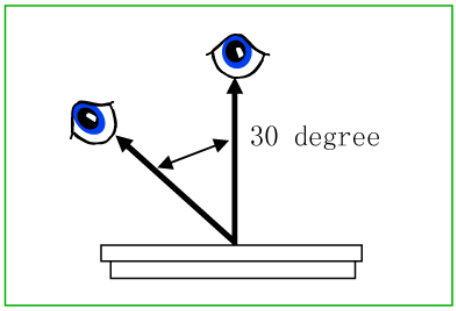

Under daylight lamp 20～40W，product distance inspector ‘eye 30cm,incline degree 30°。

3. **LCD area define:**

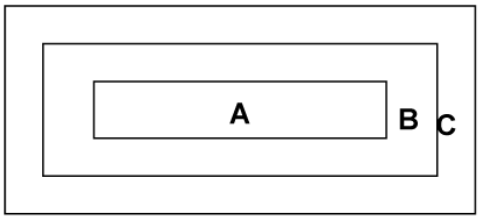

Area A：display area

Area B：VA area

Area C：out of VA area, not in sight after assembly

Remark: non-conformance at area C, but is OK that isn’t influence reliability of product & assembly by customer.

4. Inspection standard

4.1 Major non-conformance

NO.	Item	Inspection standard	Rate
4.1.1	Function non-conformance	1) No display, display abnormally 2) Miss line, short 3) B/L no function or function abnormally 4) TP no function	major
4.1.2	miss	No matter miss what component	
4.1.3	Out of size	Module dimension out of spec	

4.2 Appearance non-conformance

NO.	Item	Inspection standard	Rate
4.2.1	Black or white spot（power on）	**dot non-conformance define Φ** $\Phi = \frac{+y)}{2} \quad x \ ($ 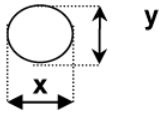 **A grade** area / size（mm）: Most approve q'ty A / B / C Φ≤0.10: ignore 0.10＜Φ≤0.15: 4 0.15＜Φ≤0.20: 2 0.20＜Φ≤0.25: 1 0.25＜Φ: 0 ignore **Most approve 4 damages, dot to dot ⩾10mm**	Minor
4.2.2	Black or white line（power on）	**A grade** Size(mm): L(length) / W(width); Most approve q'ty A / B / C ignore / W≤0.03: ignore L≤5.0 / 0.03＜W≤0.05: 3 L≤3.0 / 0.05＜W≤0.07: 2 0.07＜W: Treat with dot non-conformance ignore **Most approve 3 damages, line to line ⩾10mm**	Minor

<table>
<tr><td>4.2.3</td><td>Polarizer position</td><td>1) Polarizer attach meet drawing, disallow out of LCD.
2) Polarizer must cover display area（special require unless）</td><td>Minor</td></tr>
<tr><td rowspan="3">4.2.4</td><td rowspan="3">LCD non-conformance</td><td>(i) crash at side（remark: S=ITO length）
 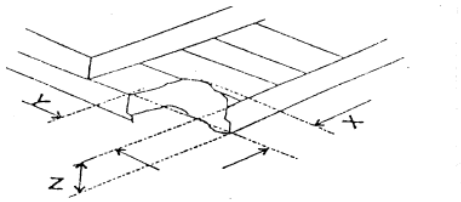

<table>
<tr><td>X</td><td>Y</td><td>Z</td></tr>
<tr><td>≤3.0</td><td>≤S</td><td>ignore</td></tr>
</table>
Crash disallow extend to ITO or seal.</td><td rowspan="3">Minor</td></tr>
<tr><td>(ii) commonly surface scathe
 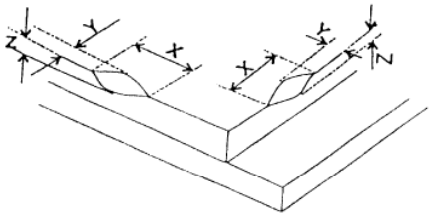

<table>
<tr><td>X</td><td>Y</td><td>Z</td></tr>
<tr><td>≤2.0</td><td><frame edge</td><td>ignore</td></tr>
</table></td></tr>
<tr><td>(iii) crack
Disallow extend crack
 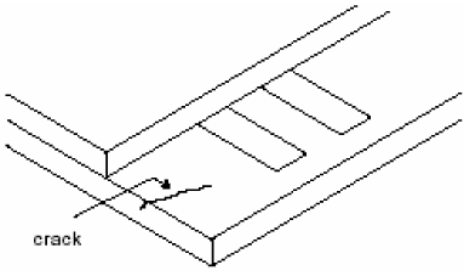
</td></tr>
<tr><td>4.2.5</td><td>Contrast voltage warp</td><td>VOP/Vlcd voltage of confirmed sample±0.15V</td><td>Minor</td></tr>
<tr><td>4.2.6</td><td>color</td><td>Color & luminance of module scope reference spec</td><td>Minor</td></tr>
<tr><td>4.2.7</td><td>Cross talk</td><td>Reference confirmed limit sample</td><td>Minor</td></tr>
</table>

12. Handling Precautions

12.1 Mounting method

The LCD panel of AMSON TFT module consists of two thin glass plates with polarizes which easily be damaged. And since the module in so constructed as to be fixed by utilizing fitting holes in the printed circuit board.

Extreme care should be needed when handling the LCD modules.

12.2 Caution of LCD handling and cleaning

When cleaning the display surface, Use soft cloth with solvent [Recommended below] and wipe lightly

- Isopropyl alcohol
- Ethyl alcohol

Do not wipe the display surface with dry or hard materials that will damage the polarizer surface.

Do not use the following solvent:

- Water
- Aromatics

Do not wipe ITO pad area with the dry or hard materials that will damage the ITO patterns

Do not use the following solvent on the pad or prevent it from being contaminated:

- Soldering flux
- Chlorine (Cl) , Sulfur (S)

If goods were sent without being sili8con coated on the pad, ITO patterns could be damaged due to the corrosion as time goes on.

If ITO corrosion happen by miss-handling or using some materials such as Chlorine (Cl), Sulfur (S) from customer, Responsibility is on customer.

12.3 Caution against static charge

The LCD module use C-MOS LSI drivers, so we recommended that you:

Connect any unused input terminal to VDD or GND, do not input any signals before power is turned on, and ground your body, work/assembly areas, and assembly equipment to protect against static electricity.

12.4 packing

- Module employs LCD elements and must be treated as such.
- Avoid intense shock and falls from a height.
- To prevent modules from degradation, do not operate or store them exposed direct to sunshine or high temperature/humidity

12.5 Caution for operation

- It is an indispensable condition to drive LCD's within the specified voltage limit since the higher voltage then the limit cause the shorter LCD life.
- An electrochemical reaction due to direct current causes LCD's undesirable deterioration, so that the use of direct current drive should be avoided.
- Response time will be extremely delayed at lower temperature then the operating temperature range and on the other hand at higher temperature LCD's how dark color in them. However those phenomena do not mean malfunction or out of order with LCD's, which will come back in the specified operation temperature.
- If the display area is pushed hard during operation, some font will be abnormally displayed but it resumes normal condition after turning off once.
- Slight dew depositing on terminals is a cause for electro-chemical reaction resulting in terminal open circuit.

Usage under the maximum operating temperature, 50%Rh or less is required.

12.6 storing

In the case of storing for a long period of time for instance, for years for the purpose or replacement use, the following ways are recommended.

- Storage in a polyethylene bag with the opening sealed so as not to enter fresh air outside in it. And with no desiccant.
- Placing in a dark place where neither exposure to direct sunlight nor light's keeping the storage temperature range.
- Storing with no touch on polarizer surface by the anything else.
  [It is recommended to store them as they have been contained in the inner container at the time of delivery from us.

12.7 Safety

- It is recommendable to crash damaged or unnecessary LCD's into pieces and wash off liquid crystal by either of solvents such as acetone and ethanol, which should be burned up later.
- When any liquid leaked out of a damaged glass cell comes in contact with your hands, please wash it off well with soap and water.

13. Precaution for Use

13.1

A limit sample should be provided by the both parties on an occasion when the both parties agreed its necessity. Judgment by a limit sample shall take effect after the limit sample has been established and confirmed by the both parties.

13.2

On the following occasions, the handing of problem should be decided through discussion and agreement between responsible of the both parties.

- When a question is arisen in this specification.
- When a new problem is arisen this is not specified in this specification.
- When an inspection specifications change or operating condition change in customer is reported to AMSON TFT and some problem is arisen in this specification due to the change.
- When a new problem is arisen at the customer's operating set for sample evaluation in the customer site.

14. Packing Method

TBD