Specification for Approval

Customer:_____

Model Name:_____

Supplier Approval			Customer approval
R&D Designed	R&D Approved	QC Approved	
Peter	Peng Jun		

Revision Record

REV NO.	REV DATE	CONTENTS	Note
A	2018-011-08	NEW ISSUE	

Table of Contents

1. Scope

This specification defines general provisions as well as inspection standards for TFT module supplied by AMSON electronics.
If the event of unforeseen problem or unspecified items may occur, naturally shall negotiate and agree to solution

2. General Information

ITEM	STANDARD VALUES	UNITS
LCD type	5.0”TFT	--
Dot arrangement	480RGB)×854	dots
Color filter array	RGB vertical stripe	--
Display mode	IPS / Transmission / Normally White	-
Eyes Viewing Direction	80/80/80/80	--
Driver IC	ST7701	--
Module size	66.2(W)×120.54(H)×2.15(T)(Exclude FPC)	mm
Active area	61.56(W)×109.53(H)	mm
Interface	SPI+RGB	--
Operating temperature	-20 ~ +70	°C
Storage temperature	-30 ~ +80	°C
Back Light	White LED*12	--

3. External Dimensions

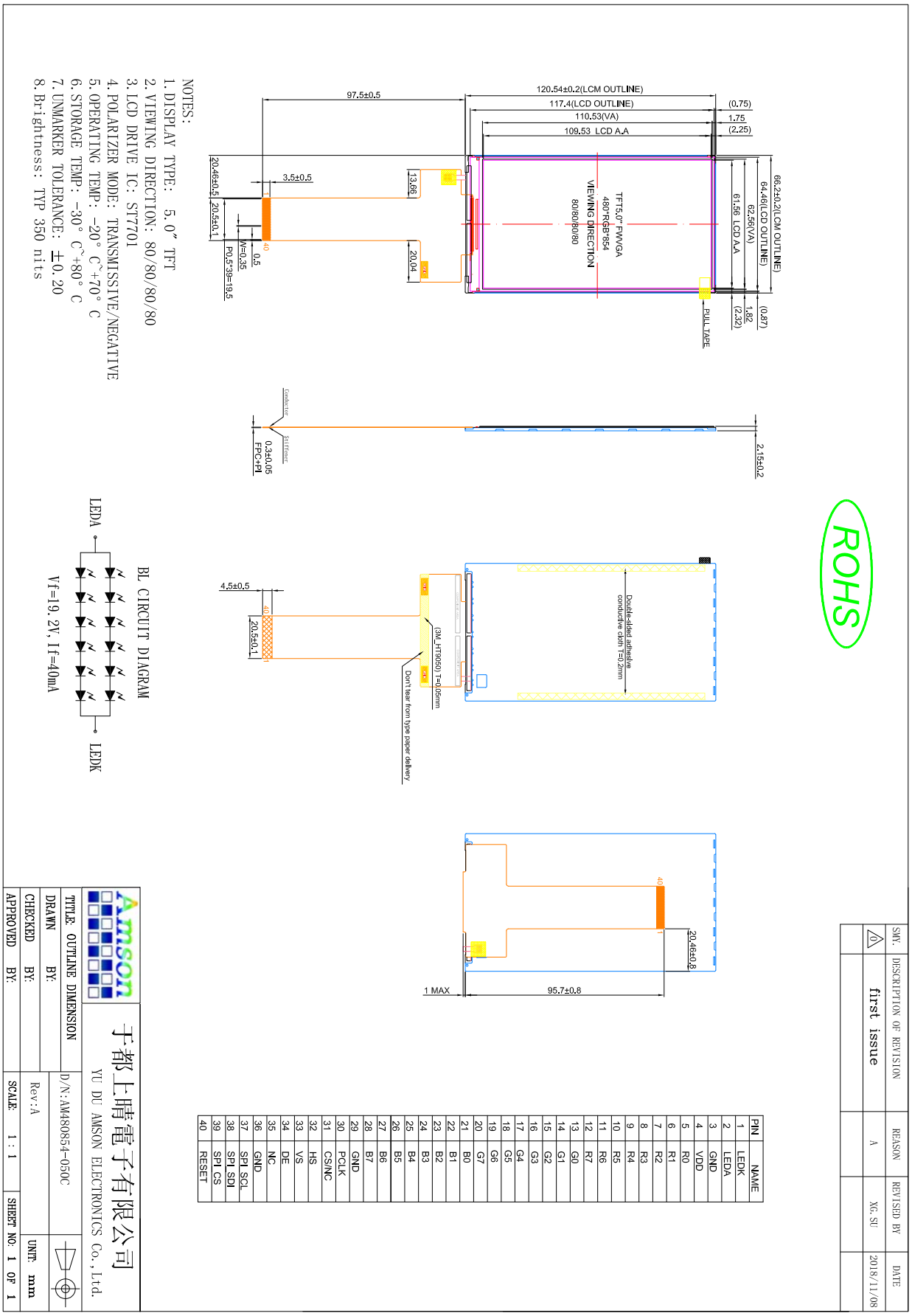

4. Interface Description

PIN	PIN NAME	DESCRIPTION
1	LEDK	LED backlight (Cathode).
2	LEDA	LED backlight (Anode).
3	GND	Power ground
4	VDD	Analog Supply Voltage
5~12	R0~R7	Red Data
13~20	G0~G7	Green Data
21~28	B0~B7	Blue Data
29	GND	Power ground
30	DCLK	Pixel clock signal in RGB I/F.
31	NC	No connection
32	HS	Horizontal sync signal in RGB I/F.
33	VS	Vertical sync signal in RGB I/F.
34	DE	Data enable signal in RGB I/F mode
35	NC	No connection
36	GND	Power ground
37	SPI_SCL	Serial clock input in SPI interface
38	SPI_SDI	Serial input signal in SPI I/F.
39	SPI_CS	Chip select pin for SPI interface.
40	RESET	Reset pin.

5. Absolute Maximum Ratings

Item	Symbol	Min.	Max.	Unit
Analog Supply Voltage	VDD	-0.3	4.8	V
Logic Supply Voltage	VDDI	-0.5	4.6	V
Driver Supply Voltage	VGH-VGL	-0.3	30	V
Operating Temperature	TOP	-20	70	°C
Storage Temperature	TST	-30	80	°C
Storage Humidity	HD	20	90	%RH

6. DC Characteristics

Item	Symbol	Min.	Typ.	Max.	Unit	Remark
Analog Supply Voltage	VDD	2.5	2.8	3.3	V	-
Logic Supply Voltage	VDDI	1.65	1.8	3.3	V	-
Input High Voltage	VIH	0.7VDD	-	VDD	V	-
Input Low Voltage	VIL	GND	-	0.3 VDD	V	-
Output High Voltage	VOH	0.8 VDD	-	VDD	V	-
Output Low Voltage	VOL	GND	-	0.2 VDD	V	-
I/O Leak Current	ILI	-1	-	1	uA	-

7. Timing Characteristics

7.1 Power on/off control

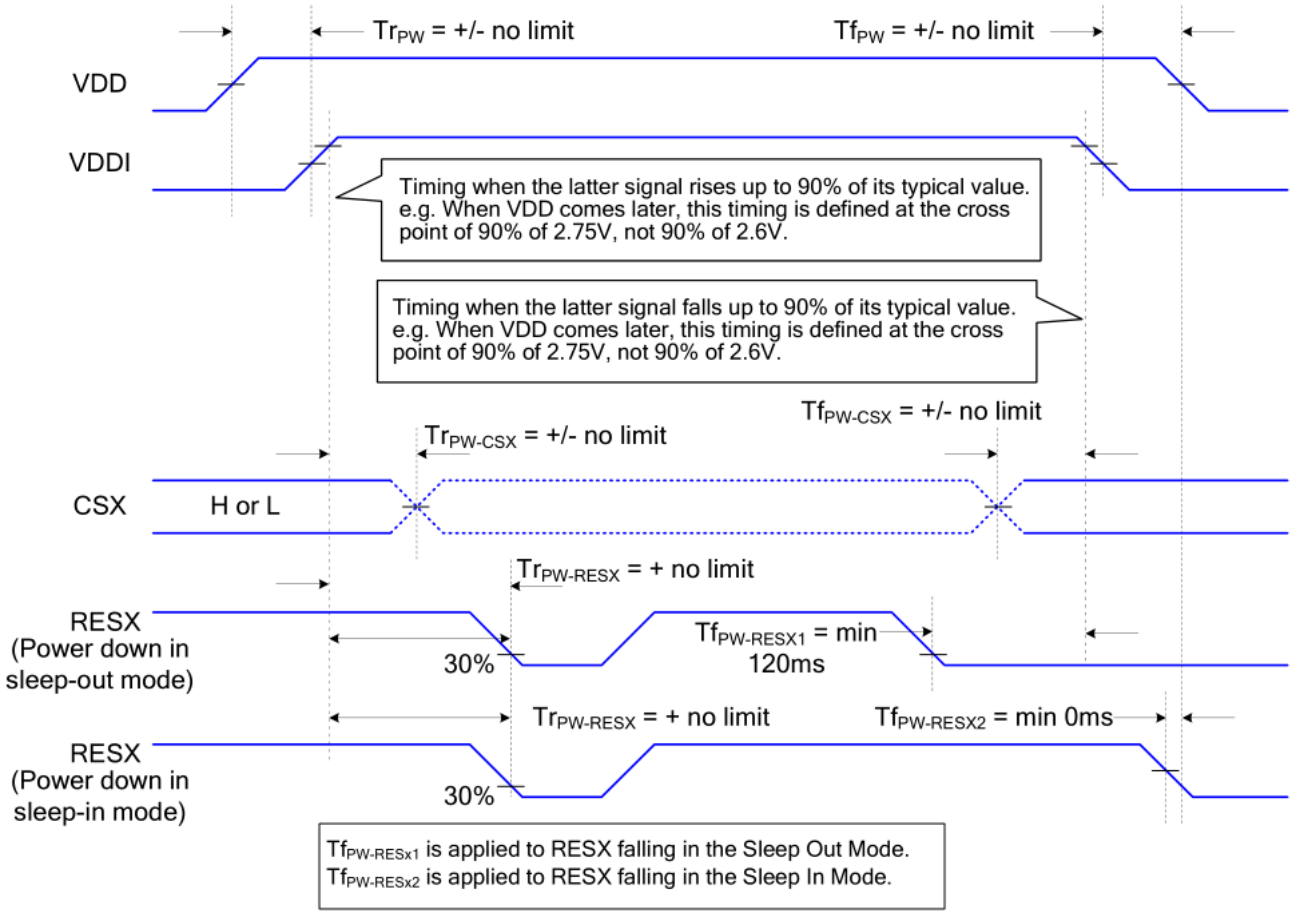

7.2 Reset Timing

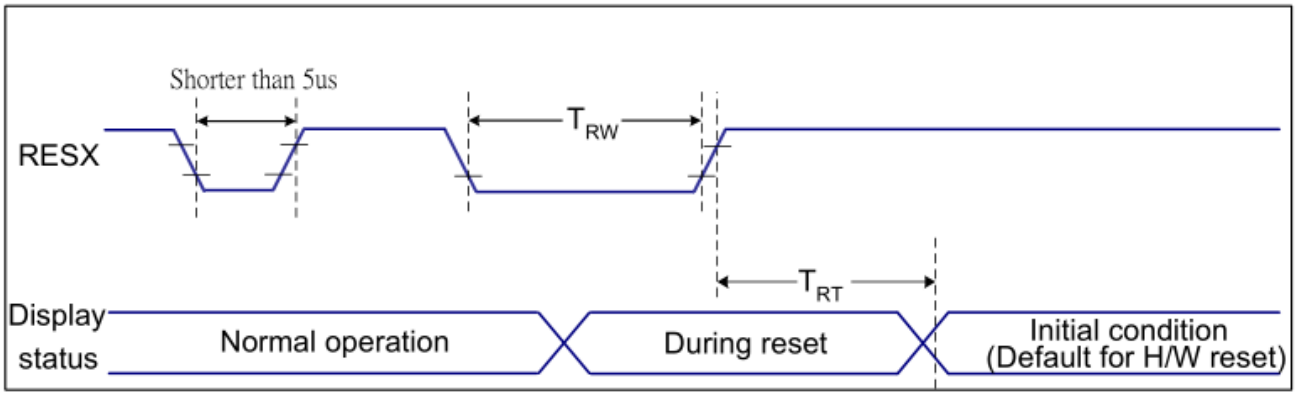

Related Pins	Symbol	Parameter	MIN	MAX	Unit
RESX	TRW	Reset pulse duration	10	-	us
	TRT	Reset cancel	-	5 (Note 1, 5)	ms
				120(Note 1, 6, 7)	ms

Note:

1.The reset cancel includes also required time for loading ID bytes, VCOM setting and other

settings from NVM (or similar device) to registers. This loading is done every time when there is HW reset cancel time (tRT) within 5 ms after a rising edge of RESX.

2. Spike due to an electrostatic discharge on RESX line does not cause irregular system reset according to the table below:

RESX Pulse	Action
Shorter than 5us	Reset Rejected
Longer than 9us	Reset
Between 5us and 9us	Reset starts

3. During the Resetting period, the display will be blanked (The display is entering blanking sequence, which maximum time is 120ms, when Reset Starts in Sleep Out –mode. The display remains the blank state in Sleep In –mode.) and then return to Default conditionfor Hardware Reset.

4. Spike Rejection also applies during a valid reset pulse as shown below:

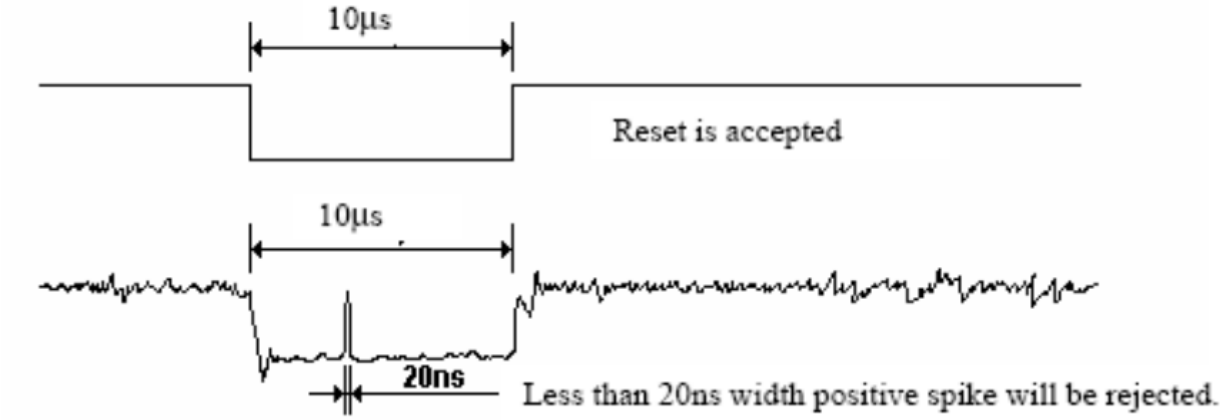

5. When Reset applied during Sleep In Mode.

6. When Reset applied during Sleep Out Mode.

7. It is necessary to wait 5msec after releasing RESX before sending commands. Also Sleep Out command cannot be sent for 120msec.

7.3 Serial Interface Characteristics (3-line serial)

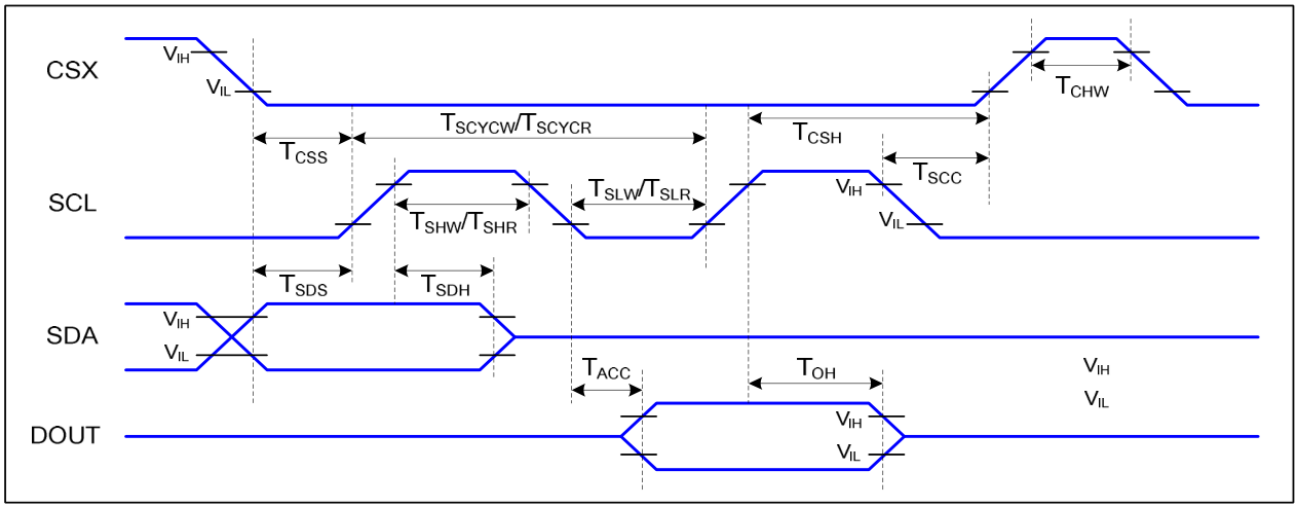

Signal	Symbol	Parameter	Min	Max	Unit	Description
CSX	T_{CSS}	Chip select setup time (write)	15		ns	
	T_{CSH}	Chip select hold time (write)	15		ns	
	T_{CSS}	Chip select setup time (read)	60		ns	
	T_{SCC}	Chip select hold time (read)	60		ns	
	T_{CHW}	Chip select “H” pulse width	40		ns	
SCL	T_{SCYCW}	Serial clock cycle (Write)	66		ns	
	T_{SHW}	SCL “H” pulse width (Write)	15		ns	
	T_{SLW}	SCL “L” pulse width (Write)	15		ns	
	T_{SCYCR}	Serial clock cycle (Read)	150		ns	
	T_{SHR}	SCL “H” pulse width (Read)	60		ns	
	T_{SLR}	SCL “L” pulse width (Read)	60		ns	
SDA (DIN)	T_{SDS}	Data setup time	10		ns	
	T_{SDH}	Data hold time	10		ns	

Note:
1. Ta = -30 to 70 °C, IOVCC=1.65V to 3.6V, VCI=2.5V to 3.6V, T=10+/-0.5ns.
2. Does not include signal rise and fall times.

7.4 RGB Interface Characteristics

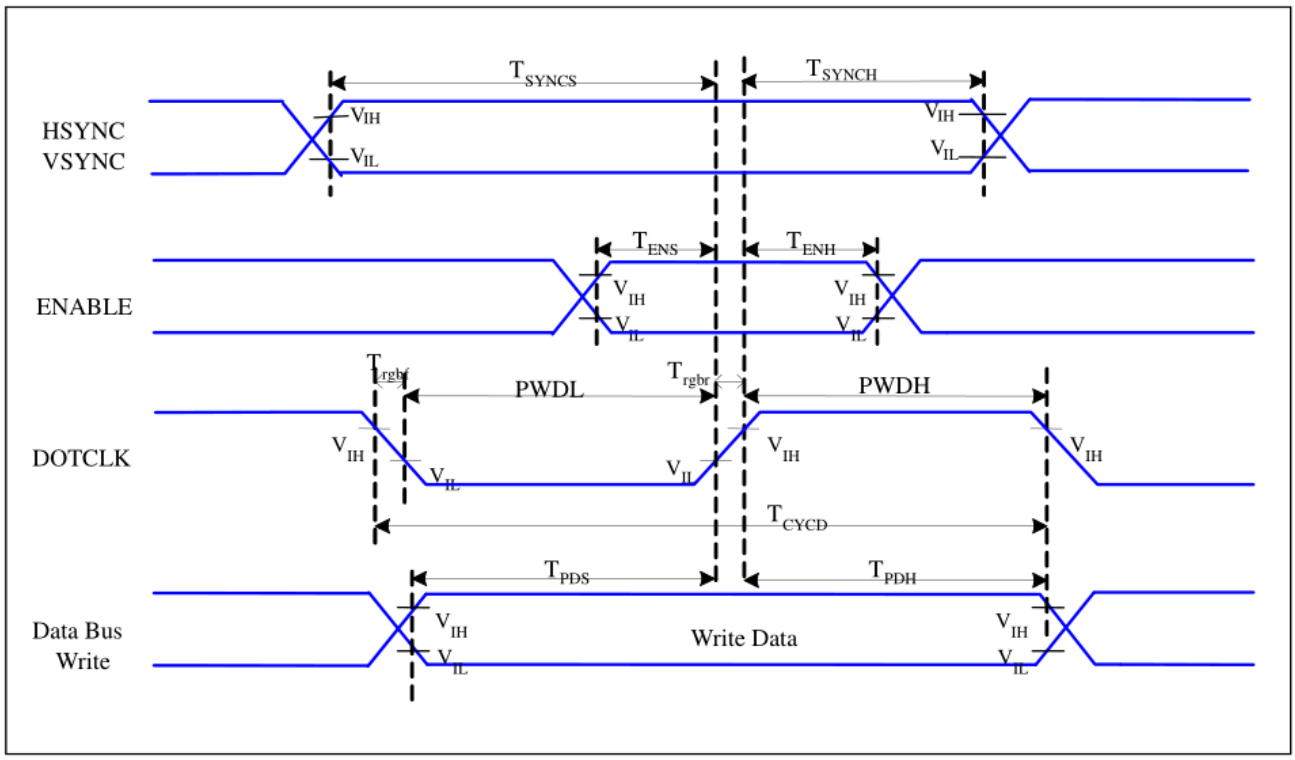

Signal	Symbol	Parameter	MIN	MAX	Unit	Description
HSYNC, VSYNC	T_{SYNCS}	VSYNC, HSYNC Setup Time	5	-	ns	
ENABLE	T_{ENS}	Enable Setup Time	5	-	ns	
	T_{ENH}	Enable Hold Time	5	-	ns	
DOTCLK	PWDH	DOTCLK High-level Pulse Width	13	-	ns	
	PWDL	DOTCLK Low-level Pulse Width	13	-	ns	
	T_{CYCD}	DOTCLK Cycle Time	28	-	ns	
	Trghr, Trghf	DOTCLK Rise/Fall time	-	15	ns	
DB	T_{PDS}	PD Data Setup Time	5	-	ns	
	T_{PDH}	PD Data Hold Time	5	-	ns	

Note: Ta = -30 to 70 °C, IOVCC=1.65V to 3.6V, VCI=2.5V to 3.6V, DGND=0V

8. Backlight Characteristic

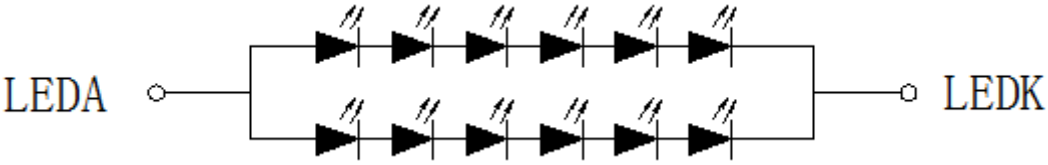

Item	Symbol	MIN	TYP	MAX	UNIT	Test Condition
Supply Voltage	Vf	18	19.2	20.4	V	If=40mA
Supply Current	If	-	40	-	mA	-
Luminous Intensity for LCM	-	300	350	-	cd/m^2	If=40mA
Uniformity for LCM	-	80	-	-	%	If=40mA
Life Time	-	20000	-	-	Hr	If=40mA
Backlight Color	White					

9. Optical Characteristics

Item	Conditions		Min.	Typ.	Max.	Unit	Note
Viewing Angle (CR>10)	Horizontal	θL	70	80	-	degree	(1),(2),(6)
		θR	70	80	-		
	Vertical	θT	70	80	-		
		θB	70	80	-		
Contrast Ratio	Center		1000	1500	-	-	(1),(3),(6)
Response Time	Rising+Falling		-	30	35	ms	(1),(4),(6)
CF Color Chromaticity (CIE1931)	Red x		Typ. -0.05	0.659	Typ. +0.05	-	(1), (6)
	Red y			0.323		-	
	Green x			0.276		-	
	Green y			0.581		-	
	Blue x			0.134		-	
	Blue y			0.125		-	
	White x			0.298		-	
	White y			0.339		-	
transmittance	tr		3.9	4.6	-	%	(1),(6)

Note (1) Measurement Setup: The LCD module should be stabilized at given temp. 25°C for 15 minutes to avoid abrupt temperature change during measuring. In order to stabilize the luminance, the measurement should be executed after lighting backlight for 15 minutes in a windless room.

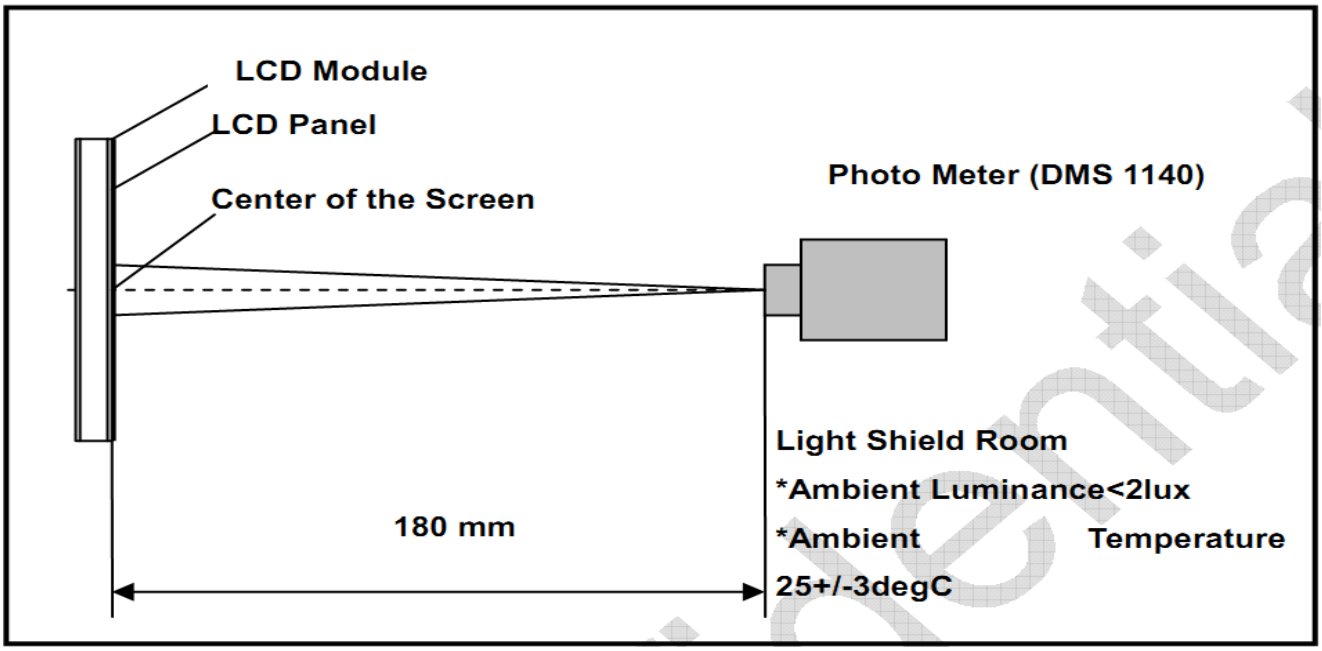

Note (2) Definition of Viewing Angle

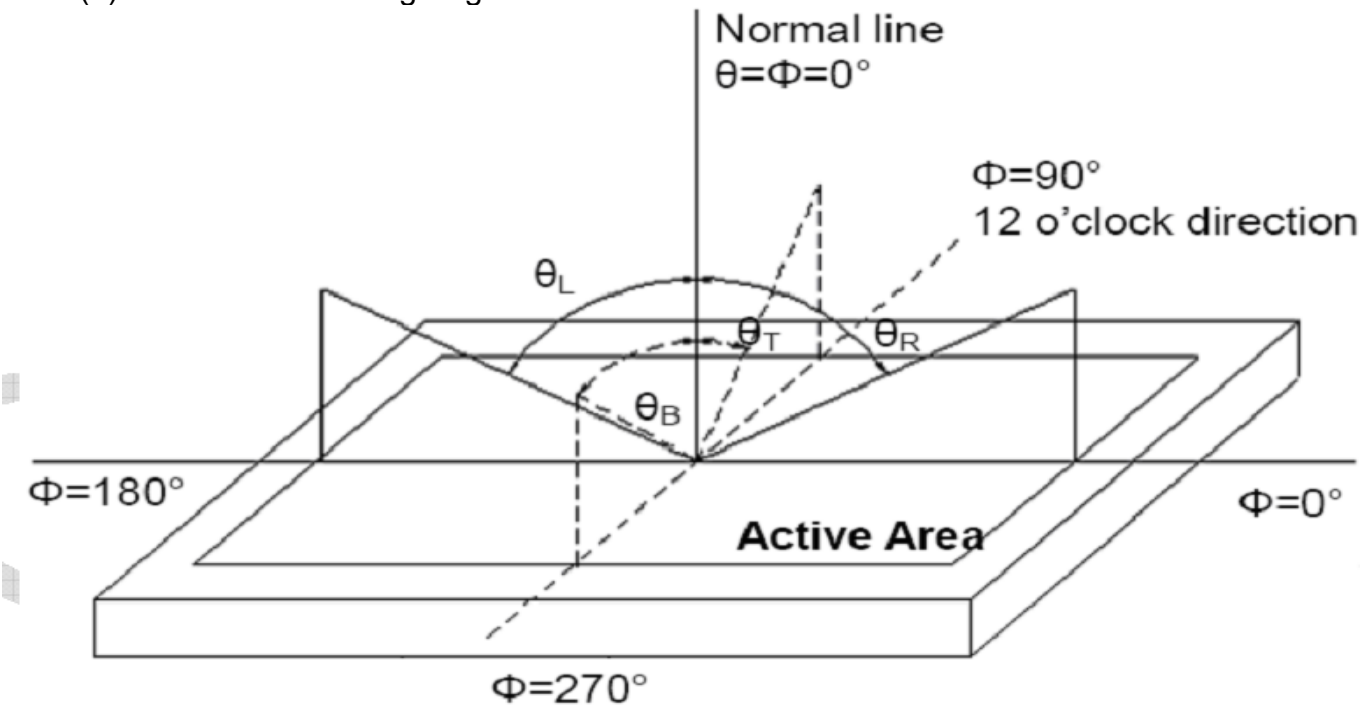

Note (3) Definition of Contrast Ratio (CR)

The contrast ratio can be calculated by the following expression

Contrast Ratio (CR) = L63 / L0

L63: Luminance of gray level 63, L0: Luminance of gray level 0

Note (4) Definition of response time

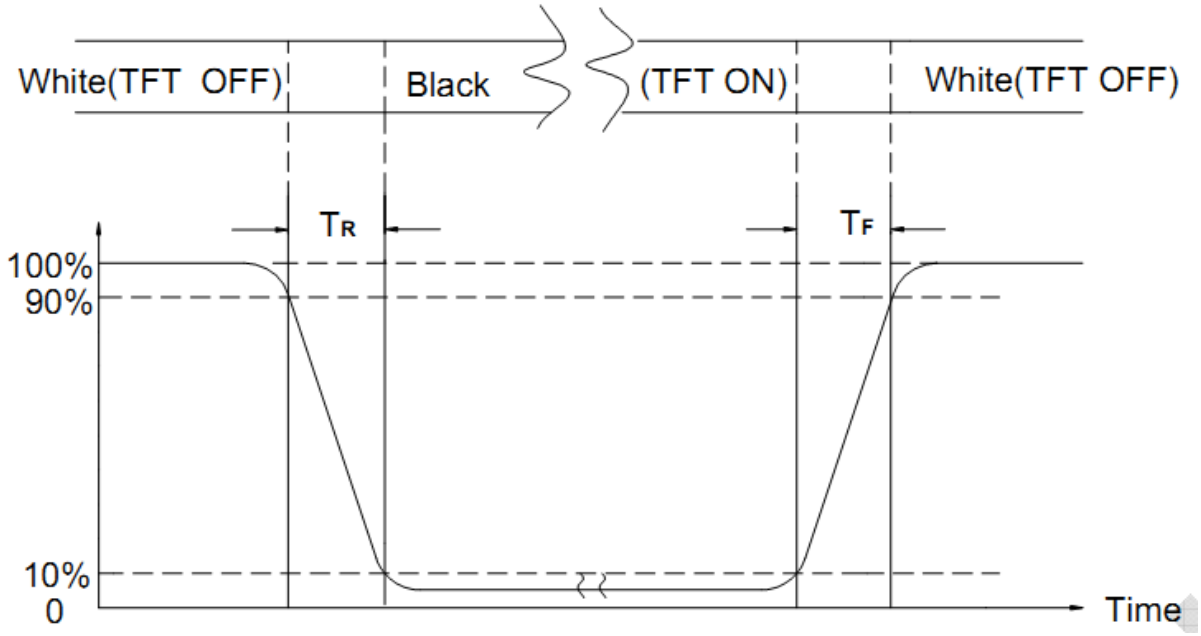

Note (5) Definition of Transmittance (Module is without signal input)

Transmittance = Center Luminance of LCD / Center Luminance of Back Light x 100%

Note (6) Definition of color chromaticity (CIE1931)

Color coordinates measured at the center point of LCD

10. Reliability Test Conditions and Methods

NO.	TEST ITEMS	TEST CONDITION	INSPECTION AFTER TEST
□	High Temperature Storage	80°C±2°C×96Hours	Inspection after 2~4hours storage at room temperature, the samples should be free from defects: 1, Air bubble in the LCD. 2, Seal leak. 3, Non-display. 4, Missing segments. 5, Glass crack. 6, Current IDD is twice higher than initial value. 7, The surface shall be free from damage. 8, The electric characteristic requirements shall be satisfied.
□	Low Temperature Storage	-30°C±2°C×96Hours	
□	High Temperature Operating	70°C±2°C×96Hours	
□	Low Temperature Operating	-20°C±2°C×96Hours	
□	Temperature Cycle(Storage)	-20°C (30min) ⟺ 25°C (5min) ⟺ 70°C (30min) 1cycle Total 10cycle	
□	Damp Proof Test (Storage)	50°C±5°C×90%RH×96Hours	
□	Vibration Test	Frequency:10Hz~55Hz~10Hz Amplitude:1.5M X,Y,Z direction for total 3hours (packing condition test will be tested by a carton)	
□	Drooping Test	Drop to the ground from 1M height one time every side of carton. (packing condition test will be tested by a carton)	
□	ESD Test	Voltage:±8KV,R:330Ω,C:150PF,Air Mode,10times	

REMARK:
1, The Test samples should be applied to only one test item.
2, Sample side for each test item is 5~10pcs.
3,For Damp Proof Test, Pure water(Resistance＞10MΩ)should be used.
4,In case of malfunction defect caused by ESD damage, if it would be recovered to normal state after resetting, it would be judge as a good part.
5, EL evaluation should be accepted from reliability test with humidity and temperature: Some defects such as black spot/blemish can happen by natural chemical reaction with humidity and Fluorescence EL has.
6, Failure Judgment Criterion: Basic Specification Electrical Characteristic, Mechanical Characteristic, Optical Characteristic.

11. Inspection Standard

11.1 Incoming Inspection and Standard:

The below incoming inspection are applied to the TFT LCM Modules supplied by AMSON Optoelectronic Industry CO.,LTD. The customers should inspect the LCM within 14 days after receiving the goods. The result of inspection should be notified to the Seller in the writing copy promptly, if the customer do not send them within 14 days, the seller has the right to judge as acceptance of goods. The inspection lot size is treated as the quantity per shipment and per model. The sampling plan shall be inspected under MIL-STD015E in Level II by single sampling. The acceptable quality level (AQL) are categorized as below grades:

CRITICAL= 0.65%, MAJOR= 0.65%, MINOR= 1.5%

11.2 Inspection condition and Warranty policy:

The delivered LCM should be stored properly, ideally under climate-controlled environment at 25 (±5) degree Celsius as well as 60% (±10) Relative Humidity. The LCM shall be inspected in the viewing angle of 45 degree from the four major angles (U/D/L/R) under the single fluorescent lamp of 20W (equal to 300 to 500 lux). For warranty, AMSON Optoelectronic Industry CO.,LTD. will provide 12 months of warranty period as standard, and provide the new replacement for the defective products which belong to the Seller's responsibility verified by the quality department.

11.3 Inspection Criteria:

11.3.1 Critical defect (重度缺失)

Item No.	Inspection content	Judgement
11.3.1.1	Functional defects	No display, abnormal display, short circuit, missing line, off-contrast and chromaticity, Touch Panel non-function
11.3.1.2	Model mixed	Other model mixed

11.3.2 Major defect: (主要缺失)

Item No.	Inspection content	Judgement
11.3.2.1	Product indication	Missing model no. and wrong model no. is indicated on the LCM.
11.3.2.2	Glass cracking	The LCD and touch panel glass crack or breakage
11.3.2.3	Missing component	The function component missing such as connector, cable, etc.

11.3.3 Minor defect (LCD) : (次要缺失)

<table>
<tr><th>Item No.</th><th>Inspection content</th><th>Judgement</th></tr>
<tr><td>11.3.3.1</td><td>Black/White spot
Foreign particles
Dust in the cell</td><td>φ = (x+y) ／2
 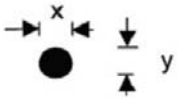

<table>
<tr><th>Diameter (mm)</th><th>Acceptable Q’ty</th></tr>
<tr><td>Φ ≦ 0.1</td><td>Ignore</td></tr>
<tr><td>0.1 < Φ ≦ 0.25</td><td>3 (Distance>5mm)</td></tr>
<tr><td>0.25 < Φ</td><td>Not allowed</td></tr>
</table></td></tr>
<tr><td>11.3.3.2</td><td>Linear defect
Black/white line
Black/white scratch</td><td><table>
<tr><th>Length(mm)</th><th>Width (mm)</th><th>Acceptable Q’ty</th></tr>
<tr><td></td><td>W ≦0.03</td><td>Ignore</td></tr>
<tr><td>L≦ 5.0</td><td>0.03 <W≦0.07</td><td>3</td></tr>
<tr><td></td><td>0.07 <W</td><td>Follow 11.3.3.1</td></tr>
</table></td></tr>
<tr><td>11.3.3.3</td><td>Polarizer Bubbles
Dent on polarizer</td><td><table>
<tr><th>Diameter (mm)</th><th>Acceptable Q’ty</th></tr>
<tr><td>Φ ≦ 0.2</td><td>Ignore</td></tr>
<tr><td>0.2 < Φ ≦ 0.5</td><td>2 (Distance>5mm)</td></tr>
<tr><td>0.5 < Φ</td><td>Not allowed</td></tr>
</table></td></tr>
<tr><td>11.3.3.4</td><td>Electrical Dot defect</td><td>Bright dot and Dark dot definition:
 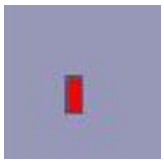 or 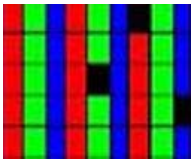
 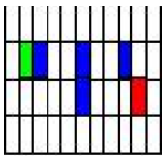 (Two adjacent dot)
Inspection pattern: black, white, red, green, and blue screen.
<table>
<tr><th>Items</th><th>Acceptable Q’ty</th></tr>
<tr><td>Bright dot</td><td>N ≦ 4 (Distance >5mm)</td></tr>
<tr><td>Dark dot</td><td>N ≦ 4 (Distance >5mm)</td></tr>
</table></td></tr>
</table>

11.3.3.5	**Glass Defect-Corner chipping**	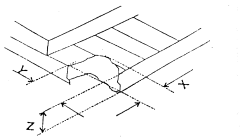 **Size(mm)** / **Judgement** **X≦3mm, Y≦S ,** **Z≦ T** **(S= ITO length, T=Single glass thickness)** — **Accept**
11.3.3.6	**Glass Defect-Side fragment**	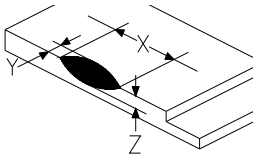 **Size(mm)** / **Judgement** **X≦2 mm, Y≦ border edge** **Z≦T** **(T= single glass thickness)** — **Accept**

11.3.4 Minor defect (Touch Panel)

Item No.	Inspection content	Judgement
11.3.4.1	**Scratch, dust, particles, foreign materials in "linear type"**	**Size (mm)** / **Acceptable Q'ty** **W≦0.05mm, L≦10mm** — **Ignore** **0.05mm<W ≦ 0.07mm, L ≦ 10mm** — **3** **W>0.07mm** — **Reject**
11.3.4.2	**Scratch, dust, particles, foreign materials in "round type"**	**Diameter (mm)** / **Acceptable Q'ty** **Φ≦ 0.25mm** — **Ignore** **0.25mm<Φ≦ 0.35mm** — **5** **Φ > 0.35mm** — **Reject**

<table>
<tr><td>11.3.4.3</td><td>Air bubbles</td><td>
<table>
<tr><th>Diameter (mm)</th><th>Acceptable Q’ty</th></tr>
<tr><td>Φ≦ 0.2mm</td><td>Ignore</td></tr>
<tr><td>0.2mm<Φ≦ 0.5mm</td><td>3</td></tr>
<tr><td>Φ > 0.5mm</td><td>Reject</td></tr>
</table>
</td></tr>
<tr><td>11.3.4.5</td><td>Scratch on printing area</td><td>
<table>
<tr><th>Size (mm)</th><th>Acceptable Q’ty</th></tr>
<tr><td>W≦0.03mm, L≦5 mm</td><td>Ignore</td></tr>
<tr><td>0.03mm<W≦0.05mm, L≦5mm</td><td>3</td></tr>
<tr><td>W>0.05mm or L> 5mm</td><td>Reject</td></tr>
</table>
</td></tr>
<tr><td>11.3.4.6</td><td>Corner chipping</td><td>


<table>
<tr><th>Size(mm)</th><th>Judgement</th></tr>
<tr><td>X≦2mm, Y≦2mm
Z<1/2T
(T= single glass thickness)</td><td>Accept</td></tr>
</table>
</td></tr>
<tr><td>11.3.4.7</td><td>Edge chipping</td><td>
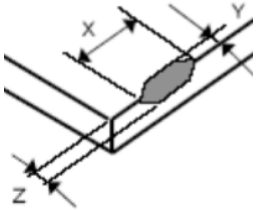

<table>
<tr><th>Size(mm)</th><th>Judgement</th></tr>
<tr><td>X≦3 mm, Y≦3 mm
Z≦1/2 T
(T= single glass thickness)</td><td>Accept</td></tr>
</table>
</td></tr>
</table>

12. Handling Precautions

12.1 Mounting method

The LCD panel of AMSON TFT module consists of two thin glass plates with polarizes which easily be damaged. And since the module in so constructed as to be fixed by utilizing fitting holes in the printed circuit board.

Extreme care should be needed when handling the LCD modules.

12.2 Caution of LCD handling and cleaning

When cleaning the display surface, Use soft cloth with solvent [Recommended below] and wipe lightly

- Isopropyl alcohol
- Ethyl alcohol

Do not wipe the display surface with dry or hard materials that will damage the polarizer surface.

Do not use the following solvent:

- Water
- Aromatics

Do not wipe ITO pad area with the dry or hard materials that will damage the ITO patterns

Do not use the following solvent on the pad or prevent it from being contaminated:

- Soldering flux
- Chlorine (Cl) , Sulfur (S)

If goods were sent without being silicon coated on the pad, ITO patterns could be damaged due to the corrosion as time goes on.

If ITO corrosion happen by miss-handling or using some materials such as Chlorine (Cl), Sulfur (S) from customer, Responsibility is on customer.

12.3 Caution against static charge

The LCD module use C-MOS LSI drivers, so we recommended that you:

Connect any unused input terminal to power or ground, do not input any signals before power is turned on, and ground your body, work/assembly areas, and assembly equipment to protect against static electricity.

12.4 packing

- Module employs LCD elements and must be treated as such.
- Avoid intense shock and falls from a height.
- To prevent modules from degradation, do not operate or store them exposed direct to sunshine or high temperature/humidity

12.5 Caution for operation

- It is an indispensable condition to drive LCD's within the specified voltage limit since the higher voltage then the limit cause the shorter LCD life.
- An electrochemical reaction due to direct current causes LCD's undesirable deterioration, so that the use of direct current drive should be avoided.
- Response time will be extremely delayed at lower temperature then the operating temperature range and on the other hand at higher temperature LCD's how dark color in them. However those phenomena do not mean malfunction or out of order with LCD's, which will come back in the specified operation temperature.
- If the display area is pushed hard during operation, some font will be abnormally displayed but it resumes normal condition after turning off once.
- Slight dew depositing on terminals is a cause for electro-chemical reaction resulting in terminal open circuit.

Usage under the maximum operating temperature, 50%Rh or less is required.

12.6 storing

In the case of storing for a long period of time for instance, for years for the purpose or replacement use, the following ways are recommended.

- Storage in a polyethylene bag with the opening sealed so as not to enter fresh air outside in it. And with no desiccant.
- Placing in a dark place where neither exposure to direct sunlight nor light's keeping the storage temperature range.
- Storing with no touch on polarizer surface by the anything else.
  [It is recommended to store them as they have been contained in the inner container at the time of delivery from us

12.7 Safety

- It is recommendable to crash damaged or unnecessary LCD's into pieces and wash off liquid crystal by either of solvents such as acetone and ethanol, which should be burned up later.
- When any liquid leaked out of a damaged glass cell comes in contact with your hands, please wash it off well with soap and water

13. Precaution for Use

13.1

A limit sample should be provided by the both parties on an occasion when the both parties agreed its necessity. Judgment by a limit sample shall take effect after the limit sample has been established and confirmed by the both parties.

13.2

On the following occasions, the handing of problem should be decided through discussion and agreement between responsible of the both parties.

- When a question is arisen in this specification
- When a new problem is arisen which is not specified in this specifications
- When an inspection specifications change or operating condition change in customer is reported to AMSON TFT , and some problem is arisen in this specification due to the change
- When a new problem is arisen at the customer's operating set for sample evaluation in the customer site.

14. Packing Method

TBD